ALTERA 0.500



KMC GLASS

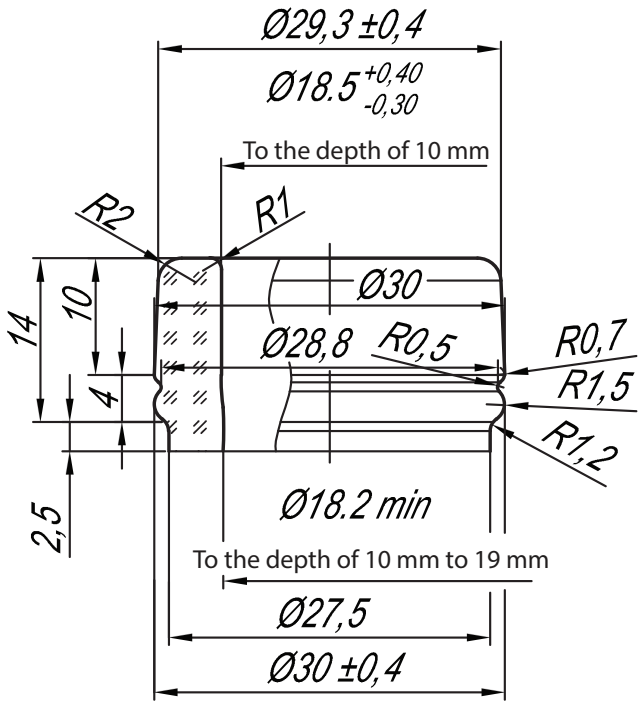

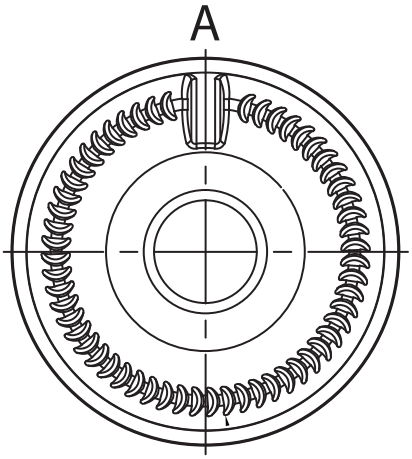

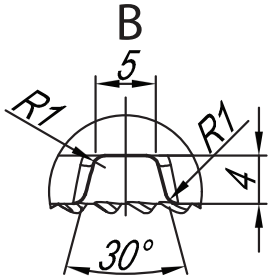

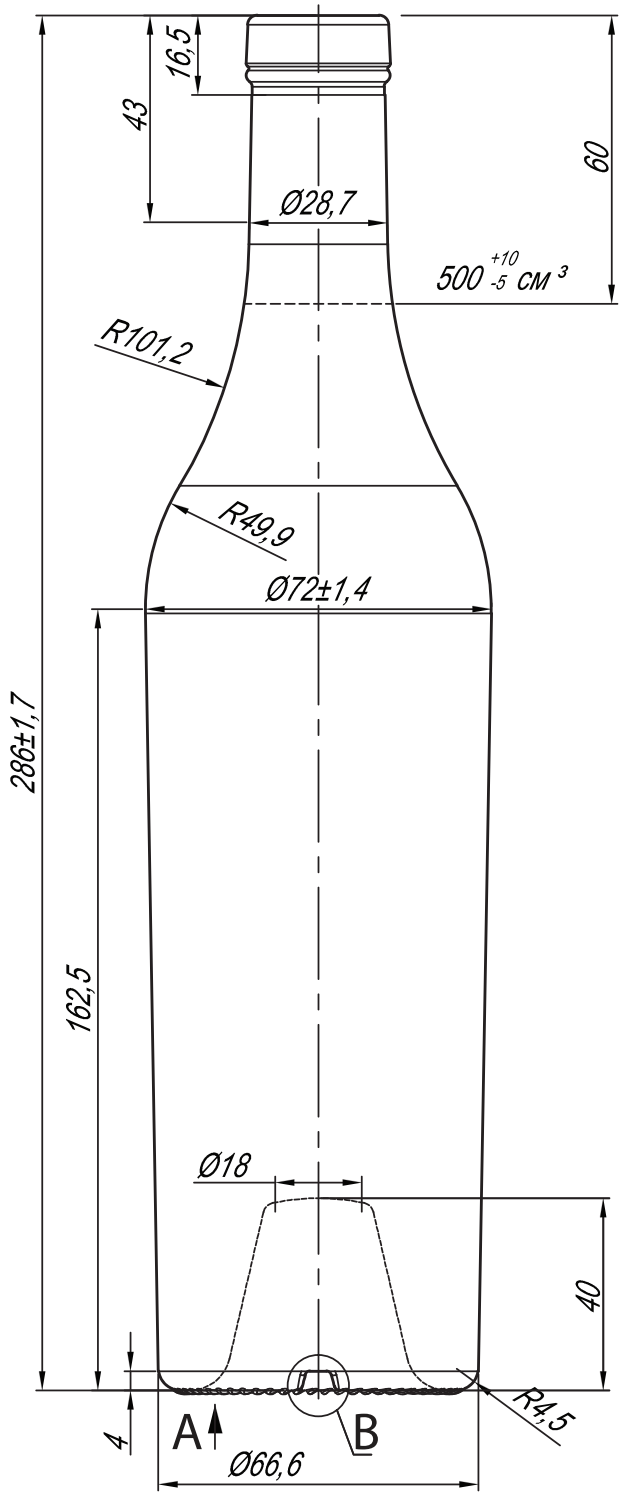

- Altera
- Filling CAP - 500 ml
- Weight - 595 g
- Height - 286±1.7 mm
- Diameter - 72±1.4 mm
- Entrance Bore Diameter - 18.5±0.4 mm
- Color - Flint

www.kmc.glass
sales@kmc.glass

KMC GLASS